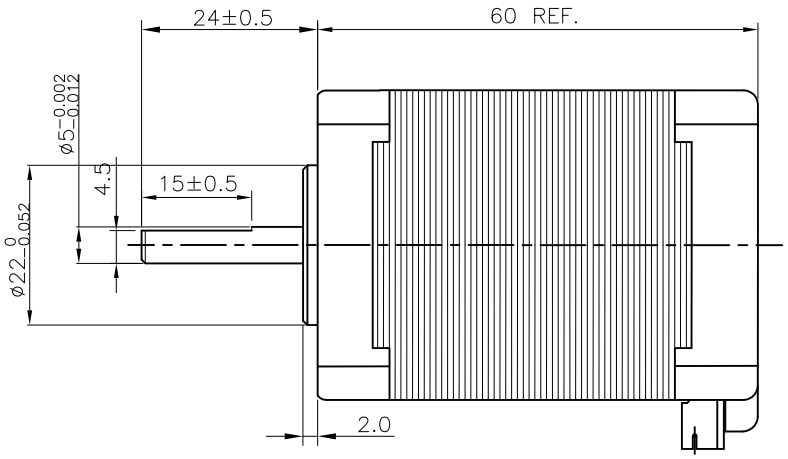

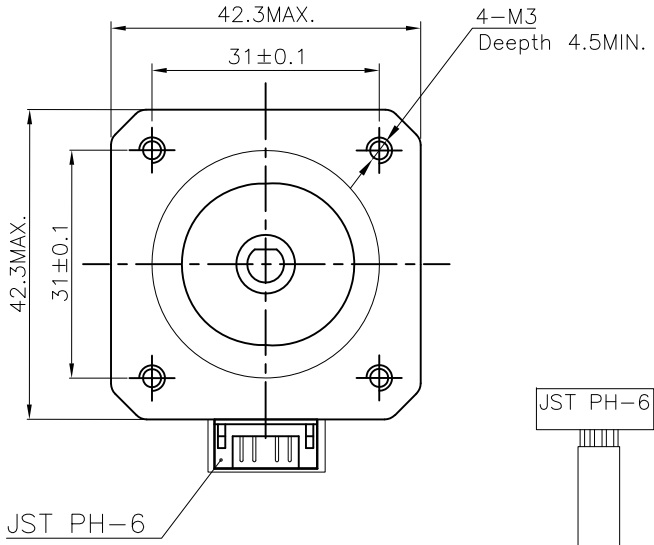

UL1007 24AWG
with PVC tube

Diagram

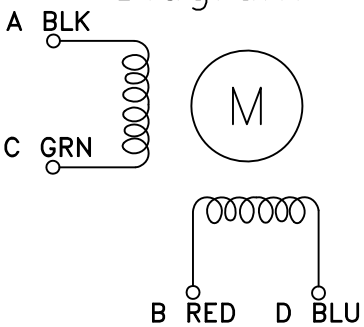

Label by laser print

LDOMOTORS.COM
1.8° Hybrid Stepper Motor
LDO-42STH60-2004AC #YYMMDD

PLEASE LET US KNOW THE CABLE LENGHT YOU WANT WHEN YOU PLACE ORDER.

Items	Specs	Items	Specs
Phase Number	2 phases	Step Angle	1.8° ±5%
Rated Voltage	4.0 VDC	Rated Current	DC 2.0 A / Phase
Resistance(20℃)	2.0±10% Ω / phase	Inductance	3.3±20% mH / Phase
Holding Torque	⩾ 8.5Kg-cm(0.85 Nm)	Detent Torque	0.28 Kg-cm REF.
Rotate Direction	ABCDA CW	MAX Starting PPS	2500 PPS
MAX slewing PPS	2500 PPS	Insulation Resistance	⩾100 MΩ(DC 500V)
HI POT	AC600V/1mA/1S	Insulation Class	Class B
Rotor Inertia	102 g.cm²	Weigth	0.5 Kg REF.

REV	ECN NO	Description	Made by	Approve	Date
A	---	New Release	Xu SD	J.B.	11/1/17

Des.	Check	Appr.	Date	Factory Code	page
		Scale			

LDO MOTORS CO.,LTD

Hybrid Stepper Motor
LDO-42STH60-2004AC